# APPENDIX F

CENTRAL STANDARDIZATION COMMITTEE

Amendment No. 2 : October 1980

to

CKS 239-1970

COMMODES (WHEEL CHAIR TYPE)

Scope of Amendment. The NOTE to the scope and the requirements for mild steel tubes and castors have been amended.

Subsection 0.1. Amend the title of SABS 657 to read "Steel tubes for non-pressure purposes Part I: Steel tubes for scaffolding and structural and general engineering purposes".

Subsection 1.1. Renumber the existing NOTE (e) to read (f) and insert the following new NOTE (e):

e) When relevant, that 125 mm castors shall be fitted (see 3.4.6)

Subsection 3.1.1. Amend the text to read as follows:

Mild steel tubes shall comply with the relevant requirements for Type ERW Grade 230 or Grade 250 tubes of SABS 657: Part I.

Subsection 3.4.6. Insert the following after "75 mm" in the fourth sentence:

or, if so required by the purchaser, 125 mm .

CENTRAL STANDARDIZATION COMMITTEE

Amendment No. 1 : January 1977

to

CKS 239-1970

COMMODES (WHEEL CHAIR TYPE)

Scope of Amendment. The specification has been amended to cover two types of commodes, namely commodes mounted on four castors and commodes mounted on wheels and castors.

Subsection 1.1. Amend the subsection to read as follows:

This specification covers material, dimensional, and constructional requirements for two types of commodes (of the wheel chair type) for use in hospitals.

Note to Subsection 1.1. Delete the existing paragraph (b), renumber paragraph (c) to read (e), and insert the following new paragraphs (b), (c), and (d):

> b) Whether the commode is to be fitted with large wheels and castors, or with castors only (see 3.4.6)
> c) When relevant, whether spoked wheels are to be fitted with brakes (see 3.4.6)
> d) Whether one or two of the castors are to be fitted with braking and locking devices (see 3.4.6)

Subsection 3.3. Amend the second line to read as follows:

"Figure 1 or Figure 2. (see 3.4.6). The dimensions shall conform to those given in 3.4 and in Figure 1 or Figure 2 (as relevant) and shall .....".

Subsection 3.4.1.

a) In the 4th line delete "over the wheel hubs" and substitute "(including when relevant, the wheel hubs)".
b) In the 8th line delete "(see Figure 1)".

Subsection 3.4.3. Delete "(see Figure 1)" in the last line.

Subsection 3.4.6. Delete the whole of the existing subsection and substitute the following:

3.4.6 Wheels and Castors. Each commode shall be fitted with two spoked wheels at the rear and two castors at the front (see Fig. 1) or with four castors only (see Fig. 2), as required by the purchaser. Spoked wheels shall be of the bicycle type with a nominal diameter over the rim of 465 mm, and shall have at least 32 spokes made from 2,00 mm diameter hard drawn steel wire. They shall be fitted with acceptable solid rubber tyres and, if so required by the purchaser, with acceptable brakes. Castors shall be 75 mm swivel castors complying with the relevant requirements of SABS 621. If so required by the purchaser, one (or two) castors (as specified by the purchaser) shall, in addition to complying with the relevant requirements of SABS 621, have an acceptable device that effectively brakes the wheel and locks the swivel action.

Figure 1. Amend the title of Fig. 1 to read as follows:

Fig. 1 - Commode (with Wheels and Castors).

Figure 2. Add the attached new Fig. 2.

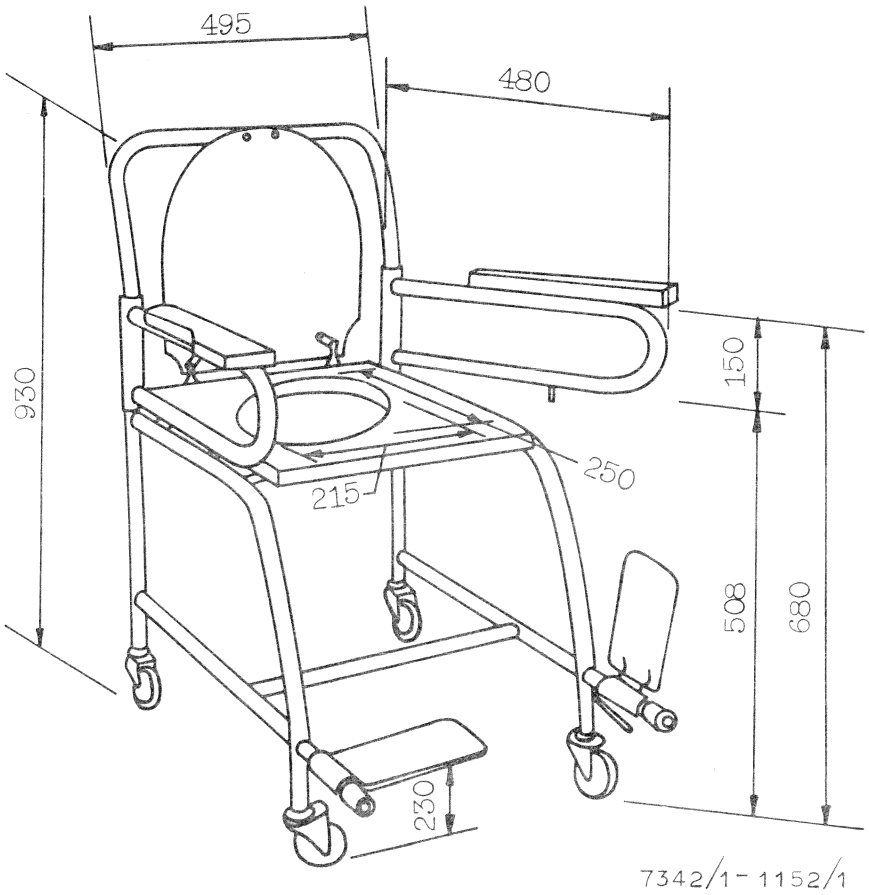


Dimensions in millimetres
Afmetings in millimeter

Fig. 2 - Commode (with Four Castors)
Stoellatrine (met Vier Pootrollers)

# SPECIFICATION

for

# COMMODES (WHEEL CHAIR TYPE)

(Metric Units)

## SECTION 0. APPLICABLE STANDARDS

0.1 The latest issues of the following standards form a part of this specification:

SABS 621 Castors for hospital equipment

SABS 657 Steel tubes for general engineering purposes

SABS 663 Primer and enamel paint for hospital furniture

SABS 778 Patients' trolleys

## SECTION 1. SCOPE

1.1 This specification covers material, dimensional, and constructional requirements for commodes (on castors) intended for use in hospitals.

NOTE: The attention of users of this specification is drawn to the following requirements that must be specified in tender invitations and in the order or contract:

a) Whether mild steel or stainless steel commodes are required (see 3.4)

b) When relevant, that castors with a locking device are to be fitted and the number of such castors (see 3.4.6)

c) When relevant, the colour of the enamel or powder coating finish (see 3.5.2)

## SECTION 2. DEFINITIONS

2.1 For the purposes of this specification the following definition shall apply:

Acceptable. Acceptable to the purchaser.

## SECTION 3. REQUIREMENTS

### 3.1 MATERIALS

3.1.1 Mild Steel Tubes. Mild steel tubes shall comply with the relevant requirements for Grade 56 or Grade 68, Class D2T2 tubes of SABS 657.

3.1.2 Stainless Steel. 18/8 (AISI Type 304) stainless steel or other acceptable austenitic stainless steel of weldable quality.

3.1.3 Mild Steel Sheet and Sections. Mild steel sheet and sections shall be of a good quality mild steel and shall be free from cracks, fins, laminations, and other defects.

3.1.4 Hardwood. Hardwood shall be well seasoned, shall have a moisture content of not less than 8 and not more than 15 per cent, a density of at least 560 kg, and shall be free from defects.

3.1.5 Aluminium Alloys. Aluminium alloys shall be of a type that has an acceptable resistance to corrosion.

3.1.6 Welding Electrodes and Filler Rods. The filler metal used in fusion welding and braze welding shall be such as will produce a joint complying with the relevant requirements of 3.2.

3.1.7 Paint. The paint shall be an enamel, or a system comprising a primer and an enamel, complying with the requirements for Type III (catalyst hardened) paint of SABS 663.

3.1.8 Powder Coating. Powder coating shall be a compounded epoxy resin suitable for application by a fluidized bed process or aerostatic spray process.

3.2 WELDED JOINTS. Parts joined by fusion welding and braze welding shall be close-fitting and in correct alignment, and the joints shall have mechanical properties and (when relevant) corrosion resistance of at least the same order as those of the parent metal. Weld faces shall be smooth, clean, and free from porosity, cavities, spatter, trapped slag, and other defects. They shall merge smoothly into the surface of the parent metal without overlap or undue undercut. The weld metal, heat affected zone, and adjacent parent metal shall be free from cracks. Where welding is done from one side only, there shall be full penetration of the joint.

3.3 DESIGN AND DIMENSIONS. The design shall be generally in accordance with Figure 1. The dimensions shall conform to those in 3.4 and in Figure 1 and shall, except where otherwise indicated, be subject to a tolerance of ± 5 mm. Normal mill tolerances shall apply.

3.4 CONSTRUCTION

3.4.1 Frame and Armrest Supports. The frame and armrest supports shall be made from mild steel tubes or stainless steel tubes (as required by the purchaser) having a nominal outside diameter of at least 25 mm and a nominal wall thickness of at least 1.60 mm. The overall width over the wheel hubs shall not exceed 660 mm. Permanent joints shall be fusion-welded or braze-welded, and any flattening or reduction in diameter of the tubes shall not exceed 4 per cent of the actual outside diameter of the tubes. The armrest supports shall be so hinged on the vertical members of the backrest by means of tubular hinges (see Figure 1) that they can be swung aside, and means shall be provided for locking them in the normal position.

3.4.2 Armrests. Armrests shall be of hardwood having a thickness of at least 20 mm, a width (at the front end) of at least 75 mm, and an overall length of at least 300 mm. They shall be securely attached to the supports in an acceptable manner.

3.4.3 Footrests. The footrests shall be aluminium or aluminium alloy (see 3.1.5) or of other acceptable material and shall be of acceptable size and strength with fluted or similar non-skid top surfaces. They shall be so hinged as to allow them to be swung upwards out of the way (see Figure 1).

3.4.4 Seat and Cover. The seat shall be of laminated wood of thickness at least 15 mm. It shall be well rounded at the edges, shall be attached to the frame in an acceptable manner, and shall have a hole (of the shape and dimensions given in Figure 1) in the centre. An acceptable cover of laminated wood or plastic shall be hinged to the back of the seat. The cover shall be fitted with a handgrip and shall operate on robust hinges that allow it to move through an angle of at least 100 degrees when moved from the closed to the fully-open position. When closed it shall cover the hole in the seat neatly. Suitable provision shall be made on the underside of the seat to hold the slop bucket and to allow its easy insertion and withdrawal.

3.4.5 Slop Bucket. Each commode shall be provided with an acceptable stainless steel slop bucket of capacity at least 14 litres and having a hinged handle.

3.4.6 Castors. The commodes shall be fitted with four 75 mm castors complying with the requirements of SABS 621. If so required by the purchaser, one or two of the castors (as specified by the purchaser) shall, in addition to complying with all the relevant requirements of SABS 621, have an acceptable device that locks both the wheel and the swivel action.

3.5 FINISH

3.5.1 General. All surfaces shall be smooth and free from sharp edges, buckles, dents, pits, deep scratches, crimps, and other defects (as relevant) that may be detrimental to the serviceability or appearance (or both) of the commode.

3.5.2 Mild Steel Surfaces. Mild steel surfaces shall have a smooth enamel finish or a powder coating finish of the colour (in both cases) specified by the purchaser. The thickness of a dry enamel film shall be at least 35 μm and, if a primer is used, the thickness of the dry system shall be at least 60 μm. The quality of the enamel finish and of the powder coating finish shall comply with the relevant requirements of SABS 778.

3.5.3 Stainless Steel Surfaces. Stainless steel surfaces shall have a medium directional satin finish or a bright polished finish[1].

3.5.4 Wood Surfaces

a) Armrest surfaces shall have a fine even sanded finish, and shall be coated with an acceptable sealer or penetrant that renders the wood resistant to moisture. The material used and the type of finish shall be acceptable.

b) The seat and cover shall have a durable waterproof coating of acceptable plastic or other material.

---

[1] Information regarding a medium directional satin finish or a bright polished finish is obtainable from the South African Bureau of Standards.

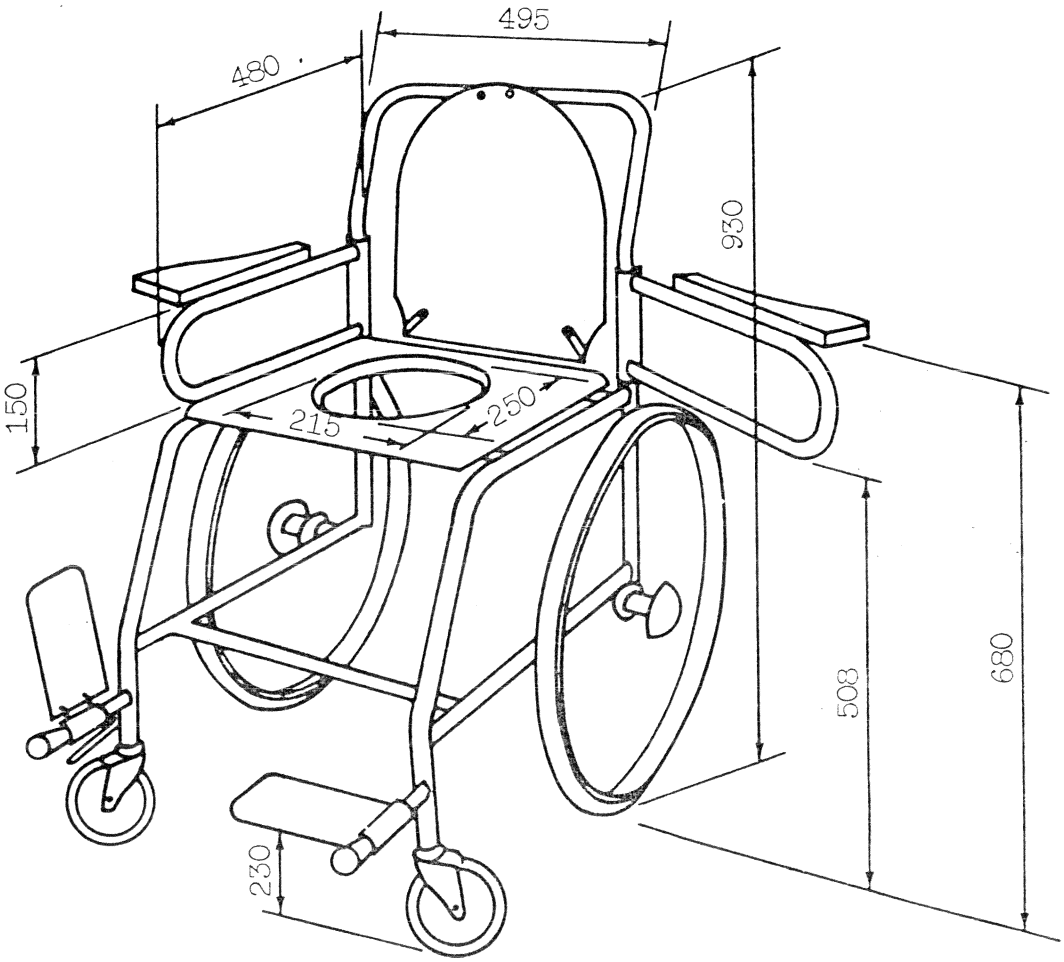


All dimensions are in millimetres
Alle afmetings is in millimeter

5452/3-618/3

Fig. 1 — Commode (Wheel Chair Type)
Stoellatrine (Rystoeltipe)